Cambridge Assessment International Education

Cambridge International AS & A Level

PHYSICS **9702/12**

Paper 1 Multiple Choice **May/June 2024**

1 hour 15 minutes

You must answer on the multiple choice answer sheet.

You will need: Multiple choice answer sheet
Soft clean eraser
Soft pencil (type B or HB is recommended)

INSTRUCTIONS

- There are **forty** questions on this paper. Answer **all** questions.
- For each question there are four possible answers **A**, **B**, **C** and **D**. Choose the **one** you consider correct and record your choice in soft pencil on the multiple choice answer sheet.
- Follow the instructions on the multiple choice answer sheet.
- Write in soft pencil.
- Write your name, centre number and candidate number on the multiple choice answer sheet in the spaces provided unless this has been done for you.
- Do **not** use correction fluid.
- Do **not** write on any bar codes.
- You may use a calculator.

INFORMATION

- The total mark for this paper is 40.
- Each correct answer will score one mark.
- Any rough working should be done on this question paper.

IB24 06_9702_12/2RP
© UCLES 2024

[Turn over

Data

acceleration of free fall	$g = 9.81\,\text{m s}^{-2}$
speed of light in free space	$c = 3.00 \times 10^{8}\,\text{m s}^{-1}$
elementary charge	$e = 1.60 \times 10^{-19}\,\text{C}$
unified atomic mass unit	$1\,\text{u} = 1.66 \times 10^{-27}\,\text{kg}$
rest mass of proton	$m_\text{p} = 1.67 \times 10^{-27}\,\text{kg}$
rest mass of electron	$m_\text{e} = 9.11 \times 10^{-31}\,\text{kg}$
Avogadro constant	$N_\text{A} = 6.02 \times 10^{23}\,\text{mol}^{-1}$
molar gas constant	$R = 8.31\,\text{J K}^{-1}\,\text{mol}^{-1}$
Boltzmann constant	$k = 1.38 \times 10^{-23}\,\text{J K}^{-1}$
gravitational constant	$G = 6.67 \times 10^{-11}\,\text{N m}^2\,\text{kg}^{-2}$
permittivity of free space	$\varepsilon_0 = 8.85 \times 10^{-12}\,\text{F m}^{-1}$ $\left(\frac{1}{4\pi\varepsilon_0} = 8.99 \times 10^{9}\,\text{m F}^{-1}\right)$
Planck constant	$h = 6.63 \times 10^{-34}\,\text{J s}$
Stefan–Boltzmann constant	$\sigma = 5.67 \times 10^{-8}\,\text{W m}^{-2}\,\text{K}^{-4}$

Formulae

uniformly accelerated motion	$s = ut + \frac{1}{2}at^2$ $v^2 = u^2 + 2as$
hydrostatic pressure	$\Delta p = \rho g \Delta h$
upthrust	$F = \rho g V$
Doppler effect for sound waves	$f_\text{o} = \frac{f_\text{s} v}{v \pm v_\text{s}}$
electric current	$I = Anvq$
resistors in series	$R = R_1 + R_2 + \ldots$
resistors in parallel	$\frac{1}{R} = \frac{1}{R_1} + \frac{1}{R_2} + \ldots$

© UCLES 2024

1 What is a scalar quantity?

A a quantity that can be represented as two perpendicular components

B a quantity that does **not** require a unit

C a quantity without a direction

D a quantity without a magnitude

2 The value of quantity X has a percentage uncertainty of 2%.

The value of quantity Y has a percentage uncertainty of 4%.

The value of a quantity W is calculated from the values of X and Y.

The value of W has a percentage uncertainty of 8%.

What could be the relationship between W, X and Y?

A $W = XY$ **B** $W = 2XY$ **C** $W = \frac{X}{Y^2}$ **D** $W = \frac{Y}{X^2}$

3 A football is kicked so that it moves vertically upwards through the air.

What is the variation in the air resistance and the resultant force acting on the ball as it moves vertically upwards?

	air resistance	resultant force
A	decreases	decreases
B	decreases	increases
C	increases	decreases
D	increases	increases

4 Which statement is **not** correct?

A Acceleration can be determined from the gradient of a velocity–time graph.

B Acceleration is the rate of change of velocity.

C Displacement can be determined from the area under a velocity–time graph.

D Velocity is the rate of change of distance.

© UCLES 2024

5 The diagram shows a laboratory experiment in which a feather falls from rest in a long evacuated vertical tube of length *L*.

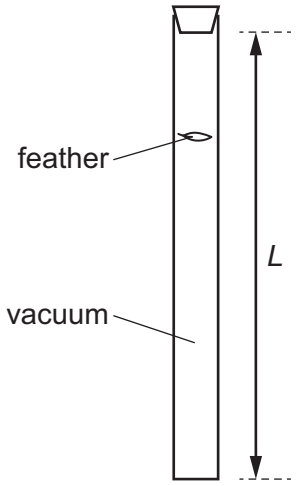

The feather takes time *T* to fall from the top to the bottom of the tube.

How far does the feather fall from the top of the tube in time 0.50*T*?

A 0.13*L** **B** 0.25*L** **C** 0.38*L** **D** 0.50*L*

6 A car travels along a straight horizontal road. The graph shows the variation of the velocity *v* of the car with time *t* for 6.0 s of its journey.

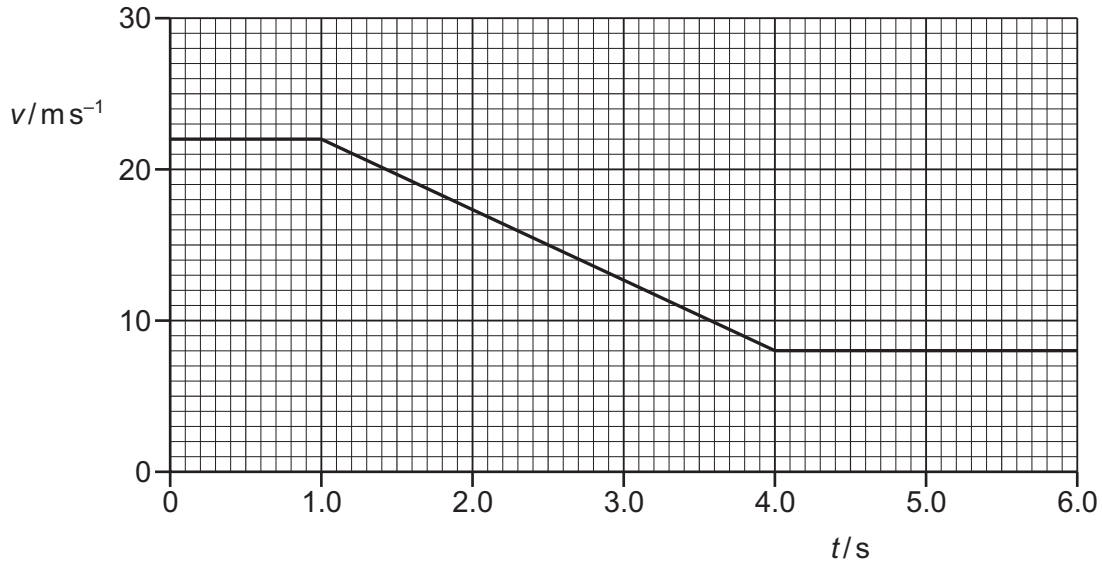

The brakes of the car are applied from *t* = 1.0 s to *t* = 4.0 s.

How far does the car travel while the brakes are applied?

A 21 m **B** 45 m **C** 67 m **D** 83 m

© UCLES 2024

7 Two satellites in deep space collide inelastically.

What happens to the total kinetic energy and total momentum?

	total kinetic energy	total momentum
A	conserved	conserved
B	conserved	reduced
C	reduced	conserved
D	reduced	reduced

8 What is a reasonable estimate of the momentum of a family car travelling at 25 kilometres per hour?

A $1 \times 10^4\,\text{kg m s}^{-1}$

B $1 \times 10^5\,\text{kg m s}^{-1}$

C $1 \times 10^6\,\text{kg m s}^{-1}$

D $1 \times 10^7\,\text{kg m s}^{-1}$

9 A ball collides with a wall. Before the collision, the ball moves with velocity $8\,\text{m s}^{-1}$ to the right. After the collision, it moves with velocity $3\,\text{m s}^{-1}$ to the left.

What is the change in velocity of the ball during the collision?

A $5\,\text{m s}^{-1}$ to the left

B $5\,\text{m s}^{-1}$ to the right

C $11\,\text{m s}^{-1}$ to the left

D $11\,\text{m s}^{-1}$ to the right

© UCLES 2024

10 A lead pellet is shot vertically upwards into a clay block that is stationary at the moment of impact, but is able to rise freely after impact.

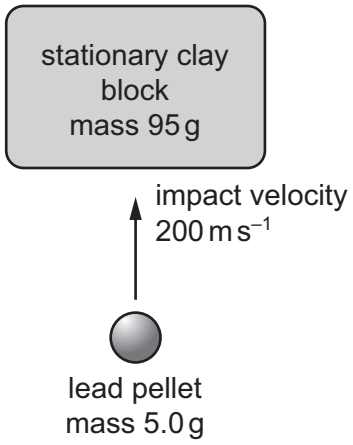

The mass of the pellet is 5.0 g and the mass of the clay block is 95 g.

The pellet hits the block with an initial vertical velocity of 200 m s^{-1}. It embeds itself in the block and does not emerge.

How high above its initial position will the block rise?

A 5.1 m **B** 5.6 m **C** 10 m **D** 100 m

11 Two forces act on an object.

Which diagram represents a couple?

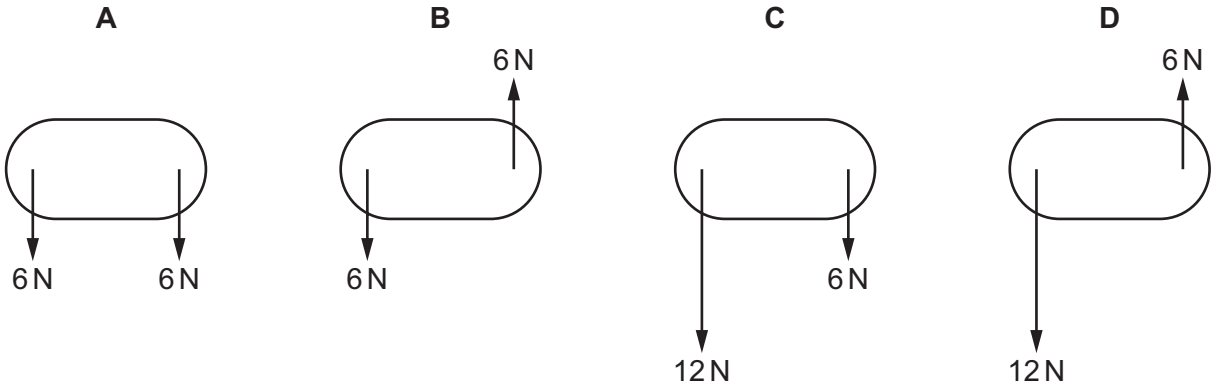

© UCLES 2024

12 The diagram shows a uniform rod, XY, that is freely hinged to a vertical wall at end Y. The rod is at an angle of 60° to the wall.

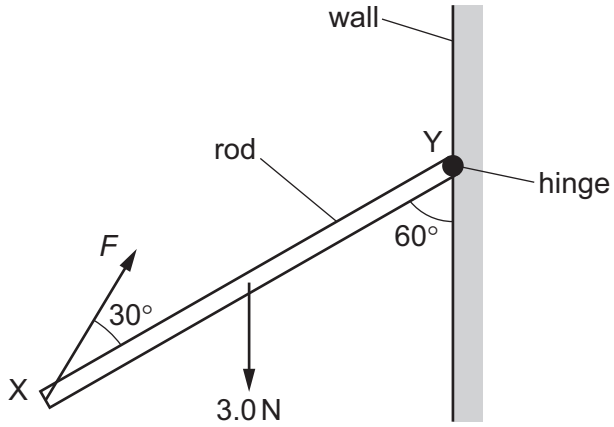

not to scale

A force *F* acts at an angle of 30° to the rod at end X. The rod has a weight of 3.0 N and is in equilibrium.

What is the magnitude of force *F*?

A 0.87 N **B** 1.5 N **C** 2.6 N **D** 5.2 N

13 Water has a density of 1.0 g cm^{-3}.

Glycerine has a density of 1.3 g cm^{-3}.

A student measures out a volume of 40 cm^3 of glycerine into a container.

The student adds water to the container to make a mixture of water and glycerine. Assume that the total volume of water and glycerine does not change when the two liquids are mixed.

Which volume of water needs to be added to make a mixture of density 1.1 g cm^{-3}?

A 4.0 cm^3 **B** 8.0 cm^3 **C** 34 cm^3 **D** 80 cm^3

14 The force resisting the motion of a car is proportional to the square of the car's speed. The magnitude of the force at a speed of 20.0 m s^{-1} is 800 N.

What useful output power is required from the car's engine to maintain a steady speed of 40.0 m s^{-1}?

A 32 kW **B** 64 kW **C** 128 kW **D** 512 kW

© UCLES 2024

15 A box of weight W is pulled by a force P along a slope.

The length of the slope is d, and the box rises a height h.

The frictional force between the box and the slope is F.

The diagram shows the directions of the forces.

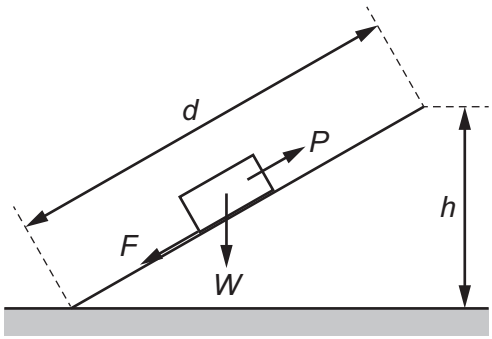

The purpose of the slope is to raise the box vertically.

Which expression gives the efficiency of the slope?

A $\frac{Fd}{Wh}$ **B** $\frac{Pd}{Wh}$ **C** $\frac{Wh}{Fd}$ **D** $\frac{Wh}{Pd}$

16 The kinetic energy of a particle is increased by a factor of 4.

By what factor does its speed increase?

A 2 **B** 4 **C** 8 **D** 16

17 A mass of 28 g is raised vertically upwards through a distance of 4.6 m.

What is the change in gravitational potential energy of the mass?

A 0.13 J **B** 1.3 J **C** 130 J **D** 1300 J

© UCLES 2024

18 A sample of metal is subjected to a force which increases to a maximum value and then decreases back to zero. A force–extension graph for the sample is shown.

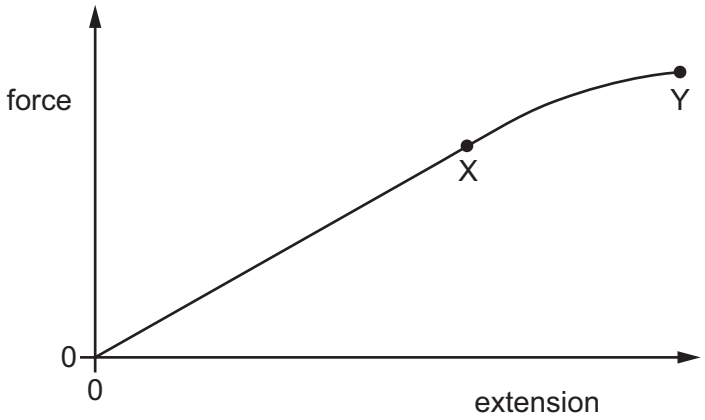

When the sample contracts, it follows the same force–extension curve as when it was being stretched.

What is the behaviour of the metal between X and Y?

A both elastic and plastic

B **not** elastic and **not** plastic

C elastic but **not** plastic

D plastic but **not** elastic

19 Two wires, P and Q, made of the same material, are stretched with an increasing force.

A graph is plotted of the variation with force of the extension of each wire.

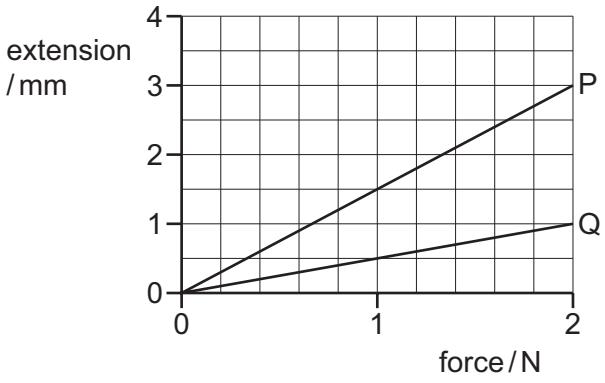

The wires have the same original length but different diameters.

What is the ratio $\frac{\text{diameter of wire Q}}{\text{diameter of wire P}}$?

A $\frac{1}{3}$ **B** $\frac{1}{\sqrt{3}}$ **C** $\sqrt{3}$ **D** 3

20 An extension–force graph for a spring is shown.

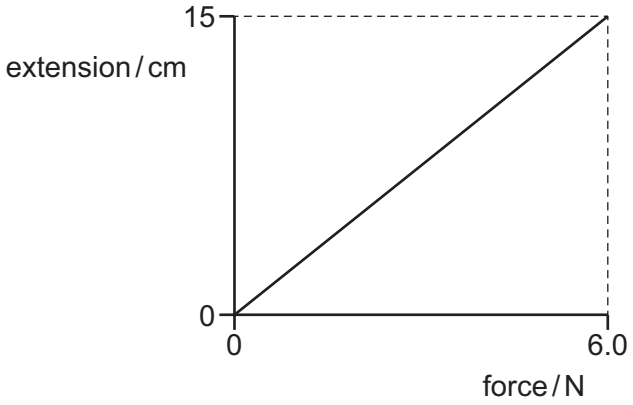

What is the spring constant of the spring?

A $0.025\,N\,m^{-1}$ **B** $0.40\,N\,m^{-1}$ **C** $2.5\,N\,m^{-1}$ **D** $40\,N\,m^{-1}$

21 A man stands stationary in front of a swing. A child sits and swings.

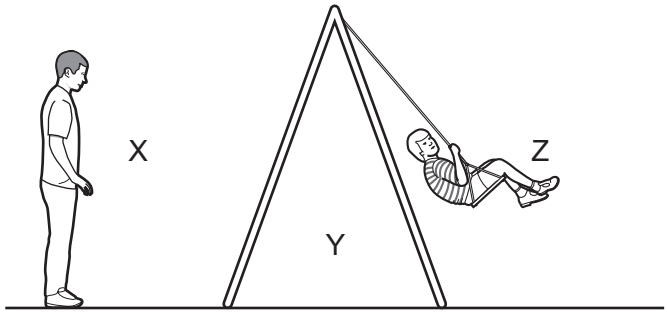

The child blows a whistle that emits a sound at a constant frequency.

The man observes the frequency of the sound when the swing is at positions X, Y and Z.

When will the man hear the highest frequency?

A when the swing is at X

B when the swing is at Y and moving away from the man

C when the swing is at Y and moving towards the man

D when the swing is at Z

© UCLES 2024

22 A loudspeaker is playing music in a room. The door to the room is open and has a width of 0.80 m.

Sound waves of many different frequencies pass through the doorway and diffract. The speed of sound in air is 340 m s^{-1}.

Which frequency of sound wave diffracts the most as it passes through the doorway?

A 2.4×10^{-3} Hz

B 8.0×10^{-1} Hz

C 2.7×10^{2} Hz

D 4.3×10^{2} Hz

23 A stationary sound wave is set up between a loudspeaker and a wall.

A microphone is connected to a cathode-ray oscilloscope (CRO) and is moved along a line directly between the loudspeaker and the wall. The amplitude of the trace on the CRO rises to a maximum at a position X, falls to a minimum and then rises once again to a maximum at a position Y.

The distance between X and Y is 33 cm. The speed of sound in air is 330 m s^{-1}.

Which diagram could represent the CRO trace of the sound received at X?

A

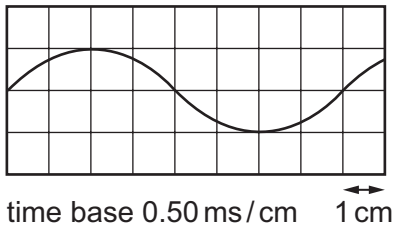

B

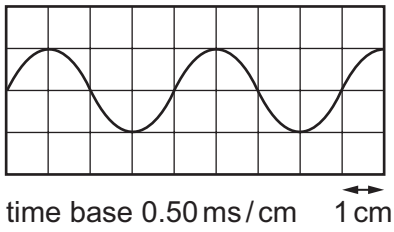

C

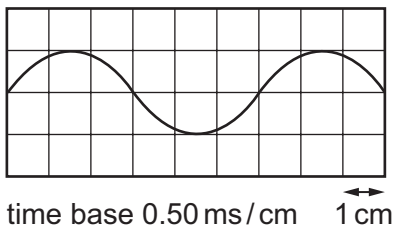

D

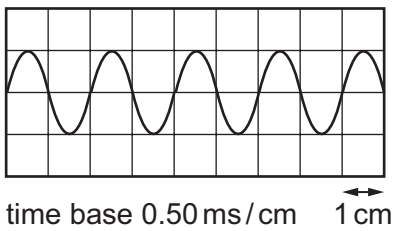

© UCLES 2024

[Turn over

24 Polarisation is associated with certain waves.

Which waves **cannot** be polarised?

A radio waves from a transmitter

B sound waves from a moving source

C ultraviolet rays from the Sun

D X-rays from an X-ray emitter

25 A guitar string is plucked.

Which statement describes the resulting waves?

A Longitudinal waves on the string cause longitudinal waves in the air.

B Longitudinal waves on the string cause transverse waves in the air.

C Transverse waves on the string cause longitudinal waves in the air.

D Transverse waves on the string cause transverse waves in the air.

26 A diffraction grating with N lines per metre is used to diffract light of various wavelengths λ.

The graph shows the relation between the diffraction angle θ and λ for different wavelengths in the nth order interference pattern.

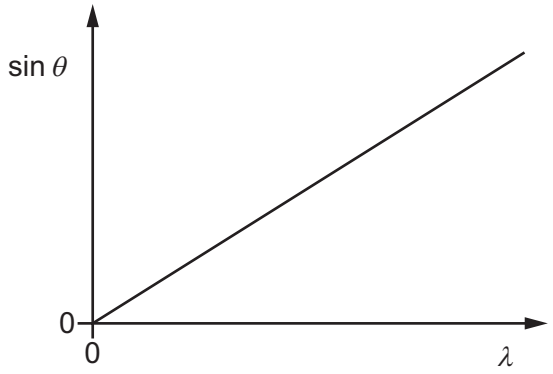

What is the gradient of the graph?

A Nn **B** $\frac{N}{n}$ **C** $\frac{n}{N}$ **D** $\frac{1}{Nn}$

27 A stationary sound wave is formed in the air column inside a tube that is open at both ends.

The stationary wave has three nodes.

How many antinodes does it have?

A 1 **B** 2 **C** 3 **D** 4

© UCLES 2024

28 Interference fringes of separation x are observed on a screen at a distance of 1.00 m from a double slit that is illuminated by yellow light of wavelength 600 nm.

At which distance from the double slit would interference fringes of the same separation x be observed when using blue light of wavelength 400 nm?

A 0.33 m **B** 0.67 m **C** 0.75 m **D** 1.50 m

29 What is the definition of potential difference across a component?

A energy transferred per unit charge

B energy transferred per unit current

C energy transferred per unit distance

D energy transferred per unit time

30 The diagram shows a cell of negligible internal resistance connected to a switch and two resistors of resistances R and $2R$.

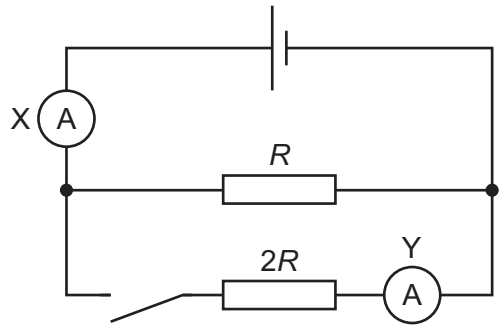

The circuit also contains two ammeters X and Y.

The reading on X is 4.0 A when the switch is open.

What are the readings on X and Y after the switch is closed?

	reading on X / A	reading on Y / A
A	4.0	1.3
B	4.0	2.7
C	6.0	2.0
D	6.0	4.0

© UCLES 2024

31 The I–V characteristics for four components, **A**, **B**, **C** and **D**, are shown.

Which component has the greatest resistance when the potential difference across it is V_1?

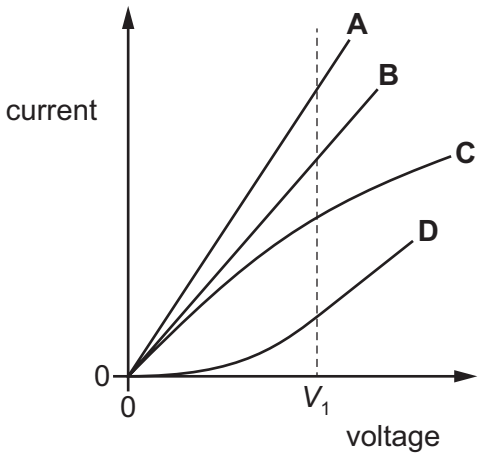

32 A cylindrical wire has cross-sectional area A and number density of free electrons n.
The wire has current I and the free electrons have average drift speed v.

A second cylindrical wire has cross-sectional area $0.5A$ and number density of free electrons $2n$.
In this wire, the free electrons have average drift speed $2v$.

What is the current in the second wire?

A $0.5I$ **B** I **C** $2I$ **D** $4I$

33 An electric current is formed by moving charge carriers.

What is **not** a possible charge on a charge carrier?

A -4.8×10^{-19} C

B -2.4×10^{-19} C

C $+1.6 \times 10^{-19}$ C

D $+3.2 \times 10^{-19}$ C

34 Which description of Kirchhoff's first law is correct?

A It considers the currents at a junction in a circuit and is a consequence of the conservation of charge.

B It considers the currents at a junction in a circuit and is a consequence of the conservation of energy.

C It considers the electromotive forces and potential differences in a circuit loop and is a consequence of the conservation of charge.

D It considers the electromotive forces and potential differences in a circuit loop and is a consequence of the conservation of energy.

© UCLES 2024

35 Two resistors of resistances r and R are connected in parallel.

The value of r is less than that of R.

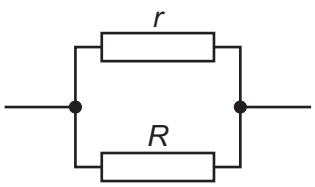

Which statement about the combined resistance of the two resistors is correct?

A It is between r and R.

B It is equal to $(r + R)$.

C It is greater than $(r + R)$.

D It is less than r.

36 The diagram shows four identical resistors connected in a circuit.

Which resistor dissipates the most power?

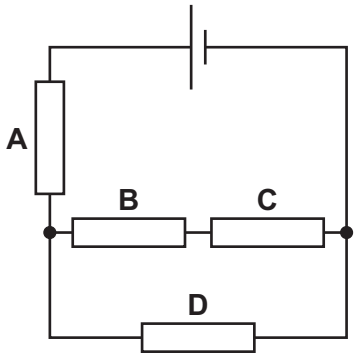

37 Nuclide X with proton number Z undergoes β^+ decay to form nuclide Y.

The decay may be represented by the equation shown.

$$X \rightarrow Y + \beta^+ + W$$

What is the proton number of Y and which particle is represented by the symbol W?

	proton number of Y	particle represented by W
A	Z – 1	antineutrino
B	Z – 1	neutrino
C	Z + 1	antineutrino
D	Z + 1	neutrino

© UCLES 2024

38 Which fundamental particles form a hadron?

A leptons

B nucleons

C photons

D quarks

39 The unstable nuclide $^{218}_{84}X$ decays through a sequence of emissions of α and β^- particles to form the stable nuclide $^{210}_{83}Y$.

How many α and β^- particles are emitted during this decay process?

	α-particles	β^- particles
A	1	1
B	2	1
C	2	3
D	3	2

40 Which statement about radioactive decay is correct?

A Neutrinos are always emitted during α-decay.

B The α-particles emitted from a radioactive sample have a continuous range of kinetic energies.

C The β^- particles emitted from a radioactive sample have a continuous range of kinetic energies.

D The proton number of a nucleus decreases by four when it undergoes α-decay.

Permission to reproduce items where third-party owned material protected by copyright is included has been sought and cleared where possible. Every reasonable effort has been made by the publisher (UCLES) to trace copyright holders, but if any items requiring clearance have unwittingly been included, the publisher will be pleased to make amends at the earliest possible opportunity.

To avoid the issue of disclosure of answer-related information to candidates, all copyright acknowledgements are reproduced online in the Cambridge Assessment International Education Copyright Acknowledgements Booklet. This is produced for each series of examinations and is freely available to download at www.cambridgeinternational.org after the live examination series.

Cambridge Assessment International Education is part of Cambridge Assessment. Cambridge Assessment is the brand name of the University of Cambridge Local Examinations Syndicate (UCLES), which is a department of the University of Cambridge.

© UCLES 2024